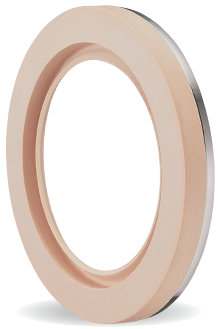

RADIAMATIC® HTS II TYPE 9535

Radiamatic® HTS II Type 9535 is a radial shaft seal made of PTFE with a stainless steel clamping element. Type 9535 is the standard variant of the HTS II portfolio.

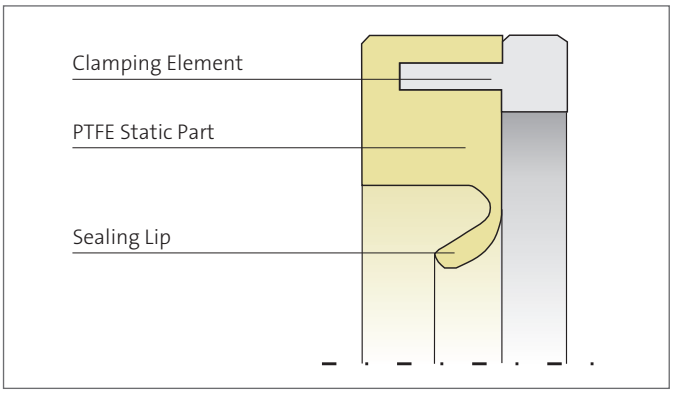

Applications
This rotary shaft seal is primarily used in the process industry. With its standard sealing lip, the ring is suitable for a wide range of applications.

Material

PTFE Basic Part

Material	Approvals	Color
PTFE K212	-/-	Black
PTFE C104	-/-	Black
PTFE G116	EU 10/2011+ FDA	White
PTFE G223	EU 10/2011+ FDA + GB 4806 / 9685	White
PTFE G224	EU 10/2011+ FDA + GB 4806 / 9685	Blue
PTFE E202	EU 10/2011+ FDA	Beige
PTFE Y002	EU 10/2011+ FDA + GB 4806 / 9685 USP Class VI + 3A Sanitary Standard	Beige

Clamping Element

Material	Description	Color
Stainless Steel	1.4571	Silver

Other material combinations on request.

VALUE TO THE CUSTOMER

- Proven PTFE shaft seal in standard design
- Ideal friction and wear behavior ensures a long service life
- Anti-adhesive, media only faces PTFE contact
- High media and temperature resistance
- Compliant with FDA, EU 10/2011, GB 4806 / 9685, USP Class VI and 3A Sanitary Standard regulations
- Suitable for CIP and SIP and their typical cleaning agents
- Secure, self-retaining fit in the housing thanks to clamping ring technology
- Flexible adaptation to housing requirements without tooling cost

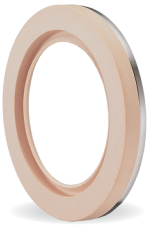

FEATURES AND TECHNICAL PROPERTIES

Operating Conditions	
Pressure*	up to 0,6 MPa
Temperature	-80 °C ... +200 °C
Sliding Speed	0 ... 18** m/s

* Type 9536 SL from the HTSII program is available for alternating pressure-vacuum operation.
** Up to 25 m/s @ pressureless operation

The maximum values shown in the table must not be applied simultaneously.

Surface Finish

Surfaces	Roughness / Hardness	Material Dependency
Housing	R_a ≤1,8 µm, $Rz1_{max}$ ≤10,0 µm	-/-
Shaft	R_a 0,1 ... 0,2 µm $Rz1_{max}$ ≤1,0 µm	-/-
Hardness	20 up to 25 HRC	G116, E202, Y002
	45 up to 65 HRC	K211, C104, G223, G224

Tolerances

Area	Tolerances
Housing	ISO H8
Shaft	ISO h11
Max. Permitted Shaft Runout*	±0,05 mm

* A reduction in shaft runout is necessary as the speed increases

Installation Diagram

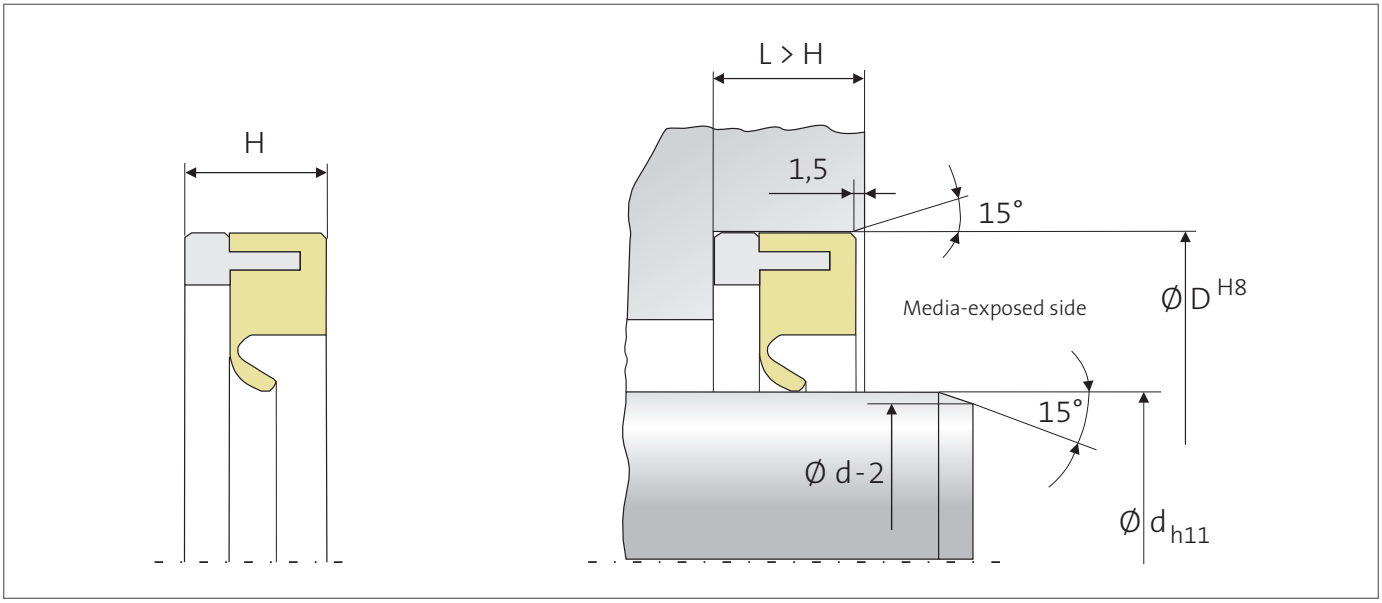

The information contained herein is believed to be reliable, but no representation, guarantees or warranties of any kind are made to its accuracy or suitability for any purpose. The information presented herein is based on laboratory testing and does not necessarily indicate end product performance. Full scale testing and end product performance are the responsibility of the user.